SUMMARY REPORT

Louisiana Coastal Protection and Restoration Project (LACPR)
Engineering Technical Approaches and Innovations Workshop
March 2006

US Army Corps
of Engineers®

in·no·va·tion (Function: noun)
1 : the introduction of something new
2 : a new idea, method, or device : NOVELTY
-- Merriam-Webster Online Dictionary

CONTENTS

INTRODUCTION..... Page 3

FORMAT OF THE WORKSHOP.....4

SUMMARY REPORT OUTLINE 6

BARRIERS.....6

CONSTRUCTION METHODS 9

PLANNING STRATEGIES 10

OPERATION AND MAINTENANCE 11

QUALITY CONTROL AND QUALITY ASSURANCE 12

DESIGN EXAMPLES 12

INTRODUCTION

Hurricanes Katrina and Rita caused tremendous loss of life and destruction of property when they struck the coast of Louisiana last year. The state is still laboring to meet the enormous challenge of rebuilding its coastal communities devastated by these hurricanes. And perhaps more importantly, Louisiana must protect itself from future storms.

In response to the combined catastrophes, Congress directed the US Army Corps of Engineers to prepare a technical report for comprehensive coastal protection from hurricanes, with particular emphasis on storms designated as Category 5 hurricanes on the Saffir-Simpson scale. With reports due at six and 24-month milestones, the Louisiana Coastal Protection and Restoration (LACPR) project will provide a plan to protect lives and preserve the cultural, economic and environmental resources that make Louisiana unique and valuable.

Let there be no mistake--this is a daunting undertaking. The force of a Category 5 hurricane is enormous, the conditions for building will be difficult, and the scope of the project is unprecedented.

Corps engineers first tackled the problem in October 2005 with the preparation of a document titled, "Assessment of Hurricane Protection in Southeast Louisiana." That report considered what might be required to shield coastal Louisiana from a 30-foot storm surge. The report provided schematic details and cost estimates for levees, walls and gates for a continuous line of protection stretching some 360 miles from Slidell, Louisiana to Morgan City, Louisiana.

And while the October Assessment Report included some innovative features and methods, including deep soil mixing to strengthen poor foundation soils, it considered these features in only a cursory review. Engineers quickly recognized the need for a more thorough survey and analysis of innovative methods to find solutions to the colossal challenges of the project.

To achieve this goal, the Corps' New Orleans District sponsored the Engineering Technical Approaches and Innovations Workshop at the Engineer Research and Development Center (ERDC) in Vicksburg, Mississippi, on March 2 and 3, 2006.

More than a hundred Geotechnical and Structural Engineers and experts from industry, academia and government accepted invitations to take part in the workshop. Some domestic participants came from as far as California, Washington, Texas, Tennessee, Virginia, New Jersey and Florida, while international participants included official visitors from the Netherlands and engineers from Sweden, France and Great Britain.

This Summary Report captures the deliberations and recommendations of the workshop participants. Their input varies from general advice to approach the project with an integrated system-wide design, to specific suggestions about materials to be used and cost estimates.

This report does not include analysis of the practicality, applicability or feasibility of any of the methods or technologies recommended. That task lies with the engineers and scientists on the LACPR team.

This Summary Report is made to facilitate dissemination of the ideas presented at the workshop. It is the intention that this document will be widely distributed and used as a reference throughout the project. It is hoped the ideas presented herein will spark productive and active discussion as the project team develops the best design to answer the challenge of constructing and maintaining a significant line of defense in south Louisiana.

FORMAT OF THE WORKSHOP

The purpose of the Engineering Technical Approaches and Innovations Workshop was to receive input from non-Corps engineers and scientists. The workshop was thus structured to consist primarily of brainstorming sessions with participants and listening to their comments and suggestions.

The workshop started with an introduction to the design problems, including poor foundation soils, remote construction sites, shortage of suitable soils for levees, and environmental impacts. Three innovative design presentations were provided to introduce some possible design and construction methods to initiate discussion.

Participants then met in assigned breakout groups to discuss, debate, and make recommendations for possible solutions. Each group was also asked to select one member to make a brief presentation to the assembly of the whole, and a member to serve as a secretary.

Prior to the start of the workshop, organizers examined the list of attendees and made group assignments. Their goal was to create eight groups of diverse and varied

experience. Participants from a single agency or company were intentionally divided, as were international guests. An attempt was made to evenly distribute Geotechnical and Structural Engineers, contractors, and government and agency employees. Groups were allowed to select their own secretary and presenter.

Participants were told that the scope of the workshop was expressly limited to discussion of the "geotechnical and structural challenge of building hurricane protection in coastal Louisiana." Topics for discussion included innovative technology and construction methods, innovative use of materials, cost-effective design and construction methods, and measures to minimize O&M costs.

Participants were strongly discouraged from straying into discussion of other issues related to the project. Topics expressly described as "off the table" included public policy issues, Benefit to Cost ratios, source of funding and non-structural solutions. However important and ultimately integral to any solution those issues may be, the focus of the workshop was clearly limited to Geotechnical and Structural Engineering topics.

Breakout groups were encouraged to be creative, innovative, and to think "outside the box." Participants were also told that current Engineering Regulations, Manuals and other design directives were not to limit their discussion or recommendations.

At the end of the brainstorming session, each group was asked to provide notes of their discussions and a brief PowerPoint presentation to capture the main points and recommendations of each group. Some groups provided hand-written notes and sketches, while others produced electronic notes.

All eight breakout groups gave their presentations in order on the morning of the second day. Questions were allowed immediately following each presentation, but were limited to factual questions or requests for clarification.

After hearing all the presentations, an open discussion of any and all issues and comments was held. Although this was a moderated discussion, it was an open forum to the greatest extent possible. Every effort was made to afford every participant the opportunity to offer opinions and to be heard by the assembly of the whole.

At the close of discussion, the workshop was officially adjourned.

This Summary Report was prepared with the goal of capturing the essential recommendations and innovative design and construction methods formulated by each breakout group and participant. This report does not include qualitative analysis of any of the ideas presented except where the participants themselves provided such analyses.

All of the PowerPoint presentations prepared by speakers and breakout groups at the workshop are posted on the project web page at: **http://LACPR.usace.army.mil**.

SUMMARY REPORT OUTLINE

The recommendations of workshop participants were varied and wide-ranging. This is precisely what we had hoped for, but it makes a coherent and organized presentation of the ideas and plans put forward all the more difficult.

For this Summary Report, the recommendations from the workshop are organized by function and method. The major topics addressed are:

- Barriers
- Construction Methods
- Planning Strategies
- Operation and Maintenance
- Quality Control and Quality Assurance

The report concludes with an array of specific design and construction recommendations with the illustrations provided by the participants.

BARRIERS

The primary recommendation of the participants is to utilize methods that will reduce the mass of the barrier system. Conventional earthen levees on weak soils to the heights anticipated would be immense, to say the least. This will result in an array of design difficulties to be overcome, including settlement, wide footprint and stability problems.

For a levee with a crown at elevation 40 on existing ground at an elevation near 0 feet, the levee footprint plus required stability and wave berms could easily approach 1,000 feet in width. It is also widely recognized that it may not even be possible to construct such a levee on weak soils in southeast Louisiana.

The benefits of reducing the mass of levees are numerous. They include:

- Possible cost savings for materials
- Less borrow and commensurate reduced environmental impact
- Increased constructability
- Reduced environmental impact with reduced footprint
- Less time waiting for consolidation of placed and in situ soils

Reduction of mass might be accomplished in many ways. A discussion of recommended methods follows.

Improving Foundation Conditions

In areas where soil conditions are especially poor, most discussion groups recommended deep soil mixing (DSM). Using commercially available methods, a suitable binder could be mixed with in situ soils to improve shear strength.

Several groups were optimistic that many of key benefits would be realized using DSM. The primary benefit of improving foundation soils in the field is the immediate and long-term reduction of settlement. Placing large earthen levees on the soft soils of south Louisiana is known to induce massive settlement problems. Reduced settlement problems also translate into lower construction costs since levees might be constructed in fewer lifts. There would also be lower O&M costs.

This also decreases the need for stability berms to "ballast" levees constructed on weak soils, the pressure from which can result in mud waves.

Deep soil mixing as in slurry wall construction could both improve stability and prevent seepage. Several groups encouraged the investigation of soil bentonite and cement bentonite walls both as ways to improve foundation conditions and as seepage barriers.

One group specifically focused on peat and recommended finding a material that can be mixed with peat to improve soil strength and other characteristics. Another noted that the variability of improved soil strengths would not be difficult to account for during design.

Using geotextiles to build levees with steeper slopes

Constructing levees with layers of geotextiles was recommended to increase the side slopes and thus allow for smaller footprints. In some examples, geotextiles would help stabilize slopes by direct application on the slopes of levees. In others, multiple lifts of material would be applied between blankets of geotextile to create a layered levee on a narrower footprint.

Using lightweight materials such as geofoam products in the core of levees

One suggested method is to simply replace conventional earthen material used in levees with lighter aggregates and materials. Geofoams were specifically recommended by several of the breakout groups. Blocks typically made of polystyrene foam are commercially available and have been used on a variety of public and private projects.

Geofoam products are resistant to most elements, although some may be susceptible to degradation when exposed to oil-based fluids. Geofoam blocks are usually lighter than water, so uplift must be considered in any design. It may be necessary to anchor the blocks in some configurations.

Other lightweight materials recommended for further investigation include foamed concrete, lightweight aggregates, tire shreds, tire bales and construction debris.

Building levees with a hollow core using precast concrete sections

Several breakout groups suggested the ultimate method to making the levees lightweight: leaving them hollow at the core. This could be accomplished by building a levee with a

reinforced concrete arch pipe at the center of the levee. This mode of design has not been tested before, but the groups that recommended it suggested more than one approach to this method.

More than one breakout group suggested allowing the precast concrete sections to fill with water as the storm surge rises. The hollow levee core could greatly reduce the weight and volume of material required to construct the levee, but would have reduced mass to resist storm surge and wave forces.

Building "pop up" barriers

More than one breakout group considered the investigation of "pop up" barriers worth the effort. Since hurricane storm surge events only occur for short periods, the presence of a full-time, full-height barrier is not required. Levees and walls that are permanently positioned will interrupt all manner of natural flows—riverine, urban drainage, even storm-related rainfall—just as effectively as they interrupt a storm surge.

Barriers that have a low profile for a majority of the time, rising only when necessary, could be an attractive alternative. One recommended design consists of a "pop up" wall. Another recommends a hinged or vertical sector gate configuration that will roll into position when storms approach. A combination of water pressure, buoyancy and mechanical methods would be utilized to move the gates and barriers into position.

The investigation of bladder dams was also suggested by some workshop participants. Bladder dams have been used in projects outside of Louisiana in various ways. One such use stores the bladder dam below the water under non-flood conditions. When water threatens to rise, the bladders are filled with air to float into place.

One suggestion was to place bladders on top of earthen levees constructed to near design storm surge elevations. When storms approach, the bladders would be inflated with either air or water to raise the level of protection to the full design height. This would help reduce the size and mass of the levee.

Additional comments

Another breakout group observed that current design methodology used by the Corps for hurricane protection levees appears to be based on a 1950's approach developed for the Mississippi River levees. They suggested this approach might be slightly conservative for hurricane protection levees. They noted that this methodology should be reviewed and revised to allow for differences in foundation conditions.

The Corps' established approach to site investigations was also discussed. It was suggested that geotechnical investigations start with cone penetrometer testing with limited borings for truth data and anomaly investigations.

One group suggested utilizing cellular structures, possibly in combination with deep soil mixing, as an alternative to earthen levees.

Whatever materials and methods are employed, more than one group recommended that designs be tailored to adjust to the cost and constructability of each reach of the levee system. A "one size fits all" approach would not be applicable. And one group noted the importance of "vandal-proof" features in remote areas.

Several schematic designs and illustrations are included the Design Examples section of this report.

CONSTRUCTION METHODS

Use of hydraulic dredging and hydraulic transport was recommended by three groups as a method to reduce construction costs. Clay balls and sand can be transported and placed in this method. Both are available throughout south Louisiana.

At the same time as several breakout groups recommended deep soil mixing, one recommended investigating job-specific equipment for the most cost effective soil mixing operations. Several tools and technologies are in use for soil mixing, and it would be appropriate to identify and utilize the best methods and machinery for each reach of the project. Different existing soil conditions might very well require different approaches to soil mixing.

There were also concerns that the scale of the required work would tax the ability of contractors to fulfill the deep soil mixing needs. Any cost analysis would need to take into account the ability of the market to produce the necessary quantities and the affect on prices.

Two groups recommended use of barges that would be floated into position and sunk to provide shoreline protection and wave breaks. One such schematic design is included in the Design Examples section of this report. An alternative suggestion included utilizing posted concrete barges already in use by the oil industry. Barges would be constructed on land, floated into position in Lake Borgne and other locations, and sunk. Barges might also be constructed with a fin on top for additional elevation. They would need to be anchored. This might be accomplished with skid keels or piles.

One breakout group suggested exploring the full range of possible soil improvements methods. They noted soils can be improved utilizing electro-osmotic or vacuum assisted consolidation, wick drains and other state-of-the-art technologies without having to remove in situ soils or haul in fill from long distances. Wick drains and relief wells were recommended by others to speed consolidation during construction.

Another suggested strategy was to construct steep reinforced slopes buried in a toe berm. After consolidation occurs, the toe berm could be removed to reveal the stabilized steeper side slope.

PLANNING STRATEGIES

Two of the breakout groups talked about providing multiple lines of defense. The recommendation was made to get the public thinking in terms of multiple lines of defense as soon as possible. The point was also made that engineers need to look at designing a hurricane protection *system*, and not merely components thereof.

It was suggested that the hurricane protection system be designed to allow overtopping of the main line levee. A secondary levee would contain water and protect developed areas. Alternately, overtopping could be allowed where a large body of water would absorb the water from overtopping or at other locations where adequate storage is available. If overtopping were a design condition, scour protection would be required. Outlet structures to drain storage areas would also be required.

More than one group was concerned about the Factors of Safety used in hurricane protection design. They suggested considering the consequences of failure and risk analysis to determine appropriate Factors of Safety. They further recommended checking areas that did not experience failures in Hurricane Katrina as well as those that did.

One group made the point that levee types and heights should be area dependent. Levees could be lower in height if they are not protecting sensitive urban areas.

Alternatively, another breakout group suggested looking to wiser storm water management. They recommended finding ways to disperse the storm surge so that it did not rise so high, or developing a plan to divert water from one basin to another.

It was also suggested that the alignment should avoid creating funnel or "pinch points." Hydrodynamic modeling shows that a storm surge pushed into confined pockets in the levee alignment increases the still water elevation considerably. Smoother alignments could result in lower design heights.

One group specifically recommended permanent, primarily earthen levees, while another group advised against using conventional methods for very high levees in areas of poor foundation soils.

If the alignment follows a more coastal path, wave protection will be a significant part of design. One recommendation was to place wave breaks away from the levee so that the levee would only have to resist still water and storm surge loads. It was recognized that the subsidence rates of barrier islands is high, so the cost to maintain such a barrier would be significant.

Alternatively, one breakout group suggested a better approach would be to plan for relative subsidence and design the alignment inland. With the recognized benefit of a healthy marsh, levees thus would not require an elaborate and expensive system of wave breaks even near the peak of storm surge events.

In areas where levees abut or are adjacent to existing or future construction, one group suggested that buildings might be incorporated into the flood protection. The bottom floors and walls might be used for protection particularly in industrial areas near waterways.

Some environmental measures were suggested for consideration. One plan would utilize oyster baskets with shell bags containing oyster cultch to encourage and nourish oyster growth and reefs. Their honeycomb structure has been shown to dissipate energy in shallow, offshore waters and to protect the shoreline.

Workshop participants also expressed concern about research into fault movement and subsidence caused by tectonic activity in Louisiana's coastal zone. One group recommended taking into consideration the presence and behavior of faults during alignment selection and design.

A programmatic approach to borrow sources was recommended to address the likely enormous quantity of material required to complete the project. Any such plan should also consider the residual benefits, such as recreational uses or water supply reservoirs, that might follow from borrow pits.

OPERATION AND MAINTENANCE

One group specifically recommended incorporating geotechnical field instrumentation to monitor performance during construction. They also suggested using remote monitoring instruments for long term health monitoring and for rapid post-hurricane damage assessment.

Other breakout groups discussed the benefits of an automated advanced warning system. They suggested providing technology that can collect and report time domain reflectometry, piezometric data, and deflections and inclinations in the levee system. They stressed the value of both visual and geophysical data collection in the maintenance of an effective hurricane protection system.

It was suggested that the crown width of levees might be constructed wider than typical in anticipation of future lifts. This recommendation is not merely for consideration of additional lifts during phased construction, but in recognition that the future analysis of storm surge protection may require higher levees. This may be as a result of sea level rise, loss of wetlands fronting protection, or revisions to the design storm.

And while the benefits of steeper side slopes might have significant impact on environmental and construction costs, participants cautioned that maintenance issues should not be overlooked. Grass cutting and access for inspection or recreational uses would be adversely affected by constructing levees with steep slopes.

QUALITY CONTROL AND QUALITY ASSURANCE

One group recommended providing funding for adequately trained and qualified personnel to conduct QC/QA functions. For such a massive civil works project, participants anticipated that dozens of inspectors would need to be hired and trained to provide essential oversight.

More than one group recommended that all design and construction records be kept in an electronic database for easy future reference. They stressed the need to adopt common data delivery and storage formats to enhance exchange among responsible parties, accommodate data verification and attribution, and assure equal access to data. This could include soil boring data, survey data, as-built plans, stage-frequency curves, stream gauging data and design flows.

One breakout group suggested building full-scale test sections to investigate the design assumptions used in the new levee system. Whether levees are constructed using conventional methods or some innovative process, it is likely they will be significantly taller than any existing earthen structures. During open discussion, many agreed that test sections would be wise.

DESIGN EXAMPLES

Several breakout groups provided descriptions and sketches of their design ideas. These are reproduced on the following pages for consideration.

ADDING ELEVATION TO EXISTING LEVEES

In areas where alignment will be the same as the existing alignment, consider using the same or similar centerline and building within the existing footprint. Figures 1 through 4 illustrate the recommended construction process.

The advantages of this method would be:

- Steeper slopes to utilize the same footprint
- Reduced future settlement
- Use of less expensive materials for levee core
- Leave material in place
- Easy access for cutoff

The disadvantages of this method include:

- Expense of geogrid
- Need to check potential sliding due to lighter weight core
- Difficulty of maintenance (i.e. mowing steep slopes)

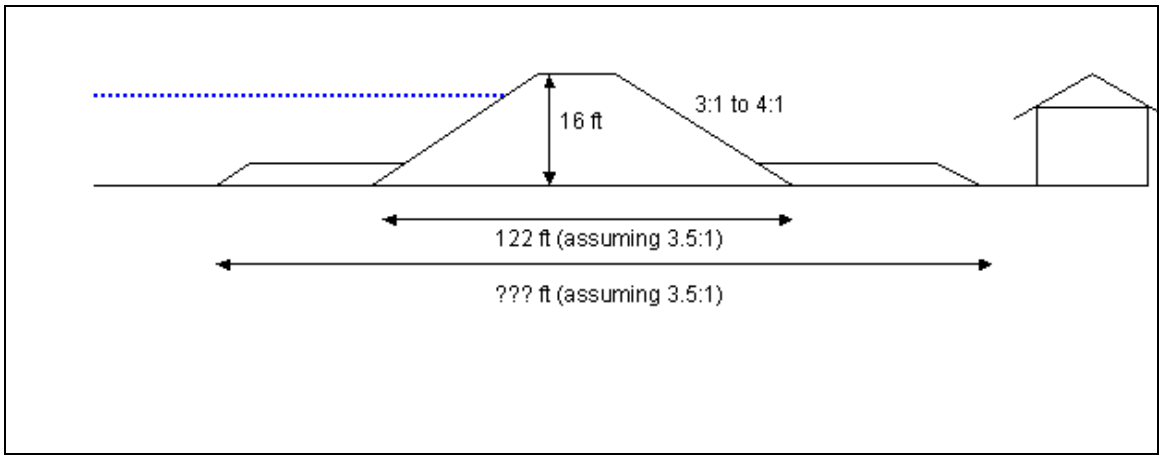

Figure 1: Existing levee adjacent to existing construction.

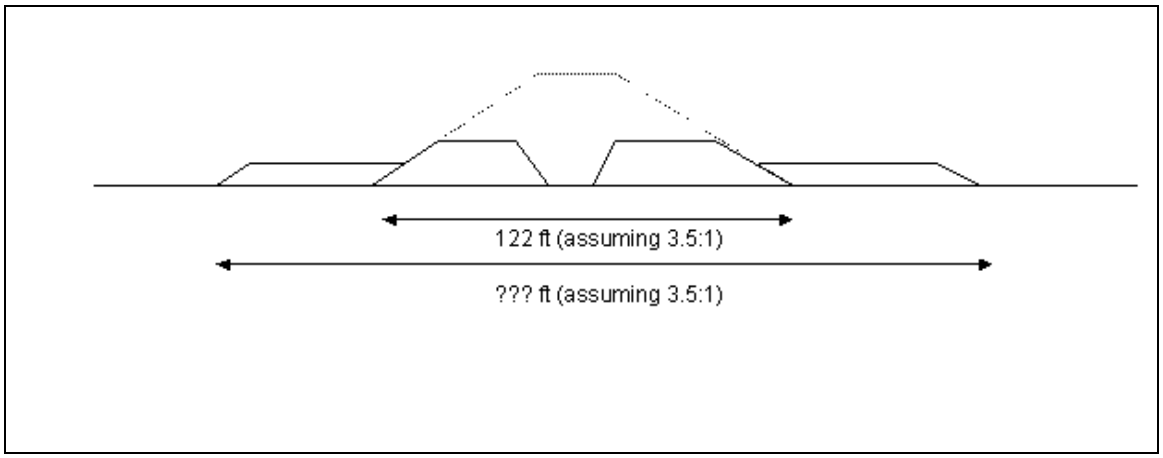

Figure 2: Cut down.

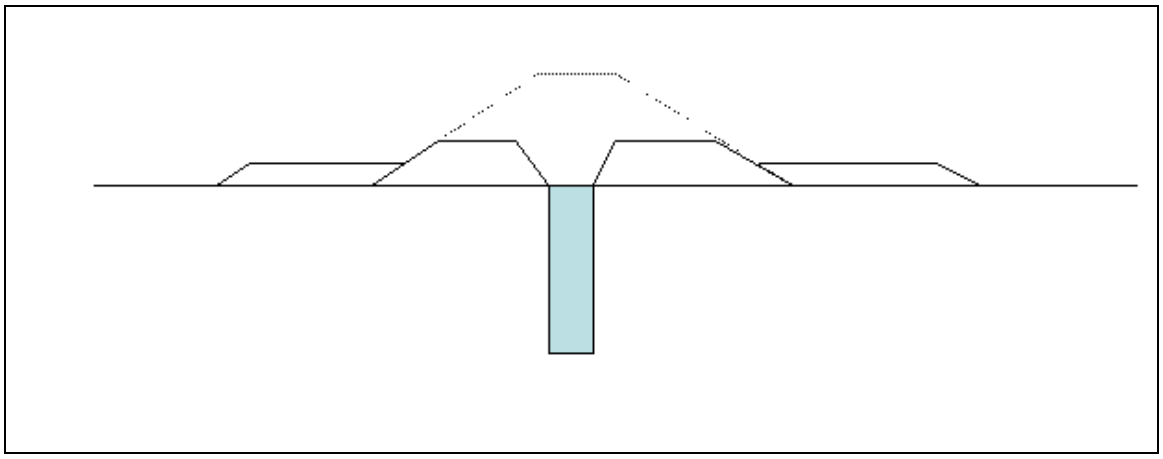

Figure 3: Cut-off wall (if required).

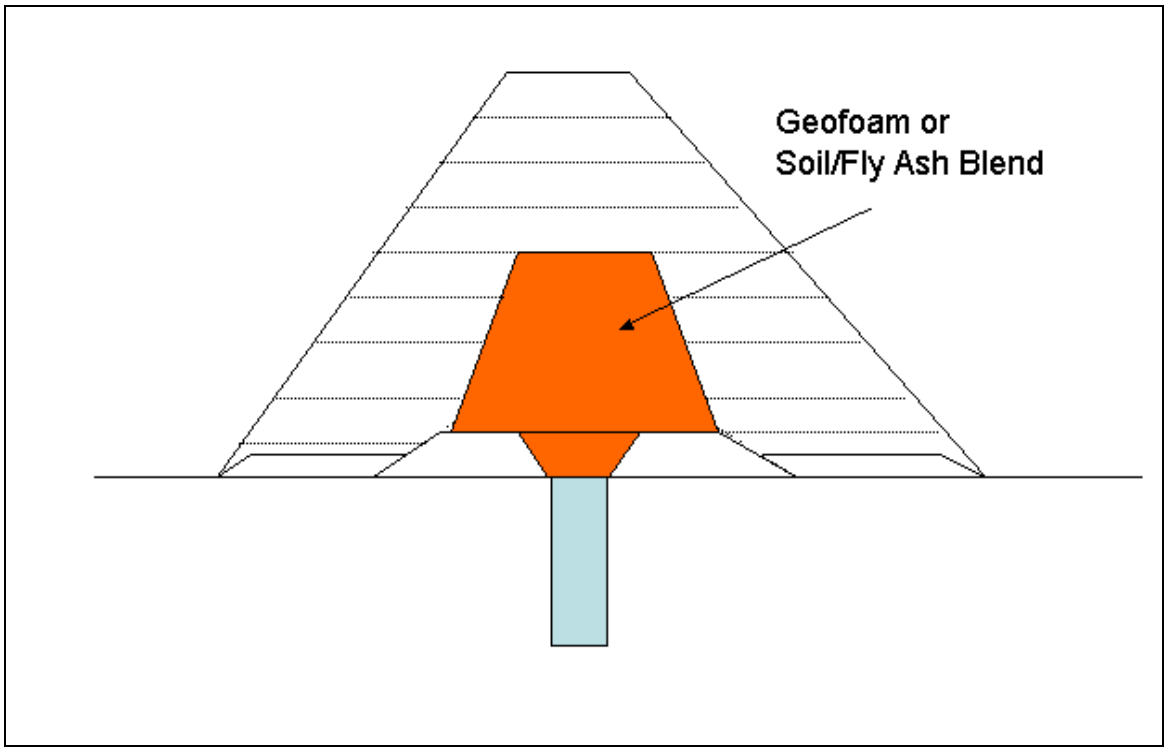

Figure 4: Reconstruct with lightweight core and reinforced earth.

STEP AND WIRE BASKET WALLS

Step-faced walls and levees could be constructed of wire baskets filled with sand or other materials. Benches should be designed to facilitate maintenance of grass. The resulting structure would have the appearance of a ziggurat and use a smaller footprint than a conventional earthen levee.

LIGHTWEIGHT PIPE ON TOP OF LEVEE

Placement of large diameter pipe on the crown of a conventional earthen levee could increase the level of protection by 10 or more feet. The pipe could be PVC or metal corrugated piping designed to withstand light and other weathering effects. The pipe would be anchored by piles to the levee.

TILT-UP PANELS

Use tilt-up panels to construct a storm surge barrier as shown in Figure 5. A slab would be constructed on a foundation prepared by deep soil mixing (DSM) and tension piles on the flood side of the barrier. A cast-in-place or precast frame is constructed and panels are cast on grade and tilted into position on the frame.

This scenario has the advantage of:

- Lightweight compared to earthen levees
- Rapid construction
- Cost effective

The possible disadvantages to this method are:

- Materials must be transported to site
- Poor aesthetics

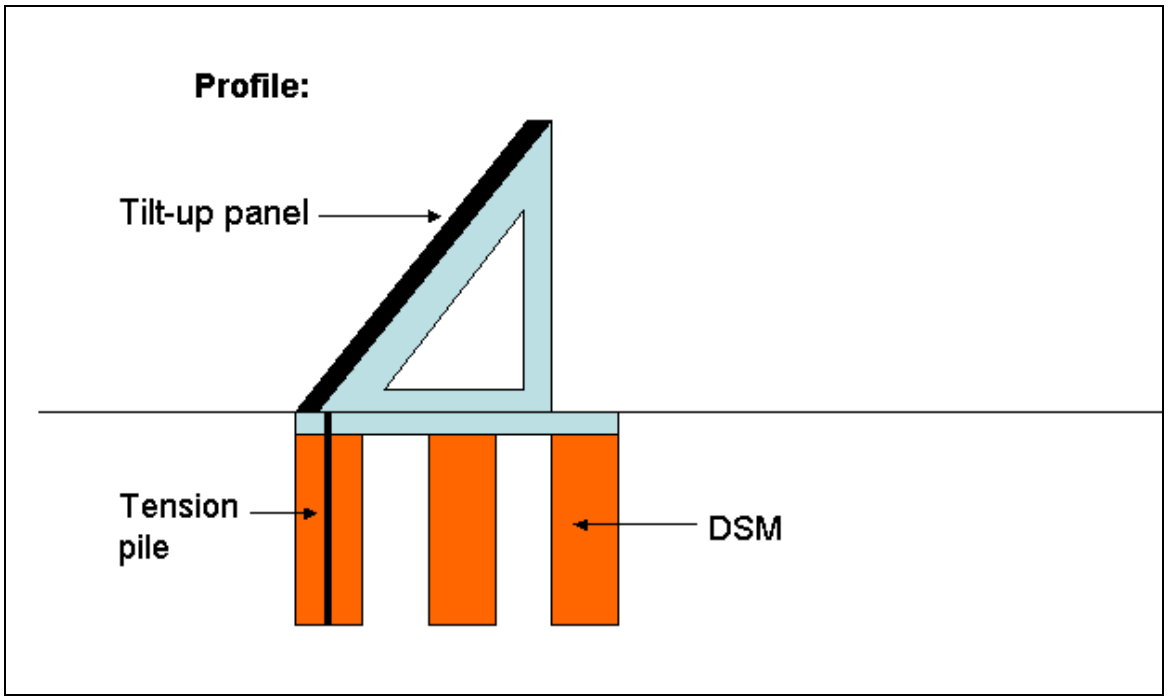

Figure 5: Tilt-up panel typical section.

CONCRETE ARCH WALL

This concept utilizes precast arches or precast blocks that are supported on piles or on an improved foundation of deep soil mixing (DSM). Arches would stand vertically and be lined up end to end to form a wall as illustrated in Figure 6. They would be sized according to the capacity of the piers, perhaps spanning hundreds of feet.

The DSM foundation could resist dead loads while lateral loads from still water and waves would be resisted by large drilled piers, driven pipe piles or steel jackets. There may also be the need for couterforts.

The pros to this scenario are:

- Force of storm surge transferred via compression to concentrated points
- Easy installation
- Speed of construction
- Minimal footprint and environmental impact

The cons for this plan would include:

- Materials need to be delivered to site
- Differential settlement at wall/pier connection
- Minimal strength to resist reverse loading conditions

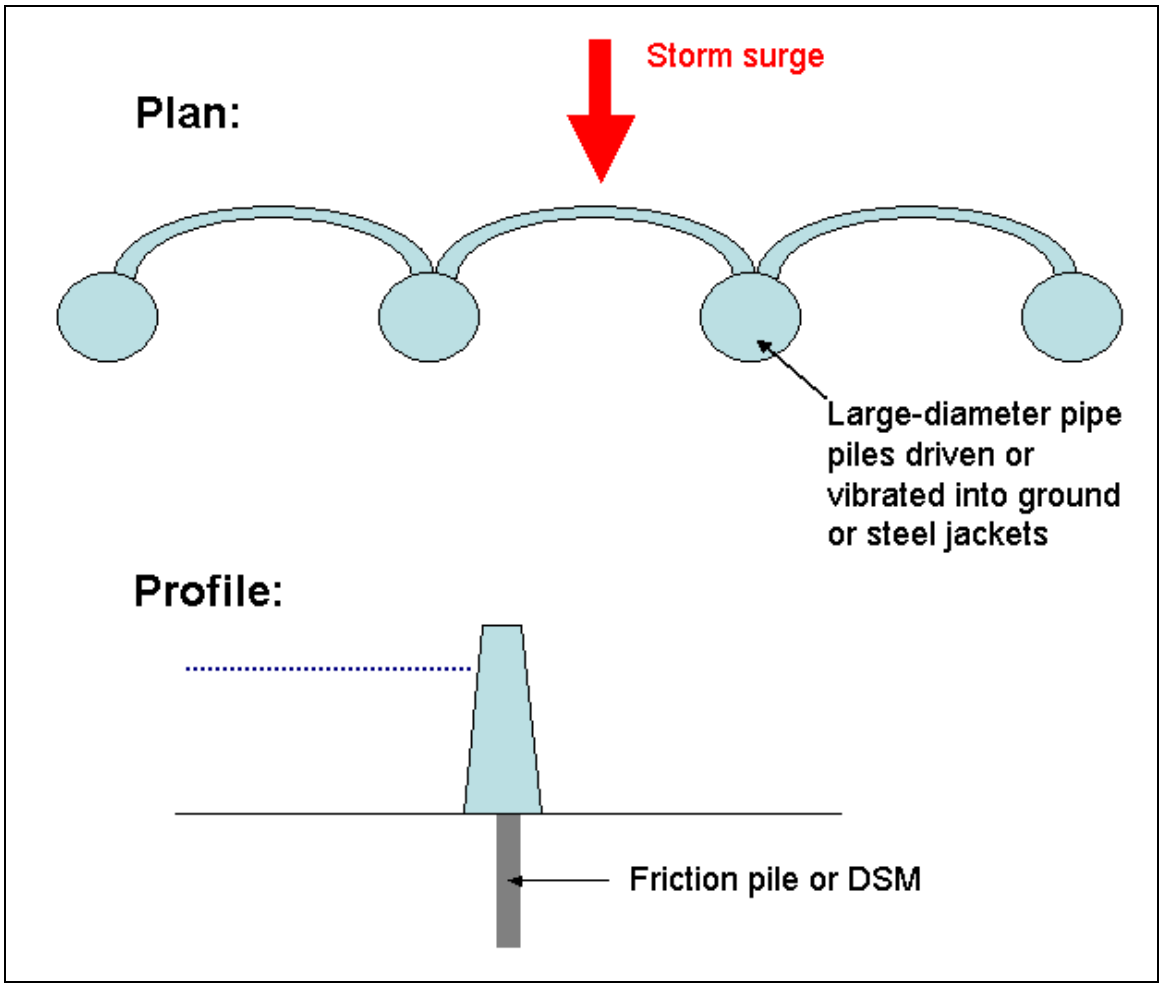

Figure 6: Concrete arch barrier plan and profile views.

OFFSHORE BARRIERS

Cellular concrete barges can be floated to appropriate locations and sunk to create wave breaks and barriers in open water as shown in Figure 7. Barges can be constructed in sizes ranging from 100 to 200 feet in length. Barges would be positioned and flooded with water for ballast. They could also be post-tensioned for additional strength.

This method has the advantage of:

- Speed of construction
- Prefabricated components
- No maintenance (i.e. mowing)
- Self-contained wave break
- Self-filling and draining

The drawbacks of this plan include:

- Need for additional anchorage
- Could be a navigation hazard
- Corrosion of reinforcing steel

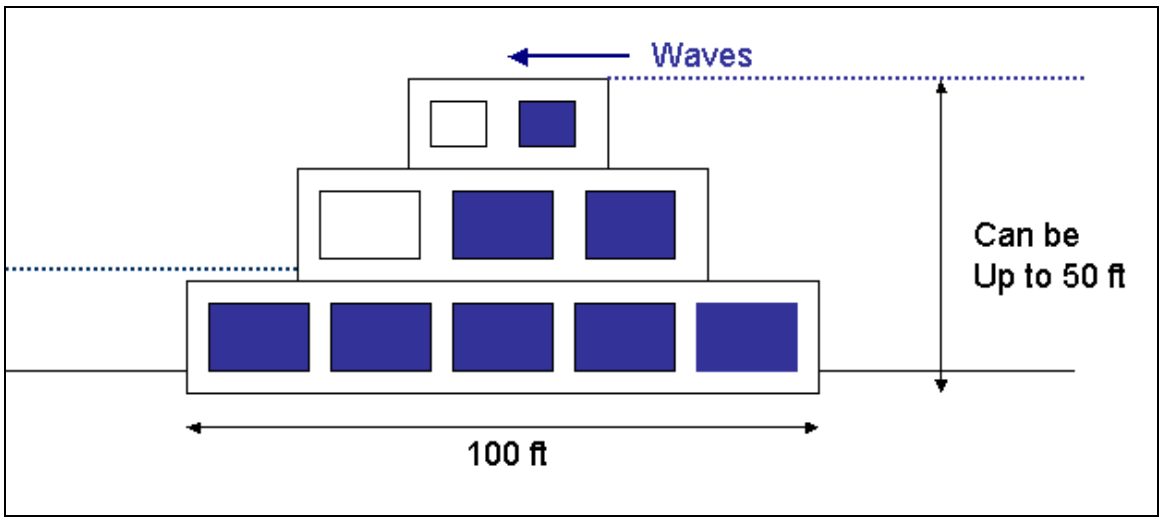

Figure 7: Stack of cellular concrete barges.

LIGHTWEIGHT STRUCTURE ON TOP OF LEVEE

This design features a conventional Category 2 or 3 earthen levee with a lightweight top to provide Category 5 protection height. The suggested design shown in Figure 8 utilizes plastic pipe encased in geogrid and supported by steel frames. The upper structure would be anchored to resist uplift and lateral forces. The upper section could be similar to a Portadam.

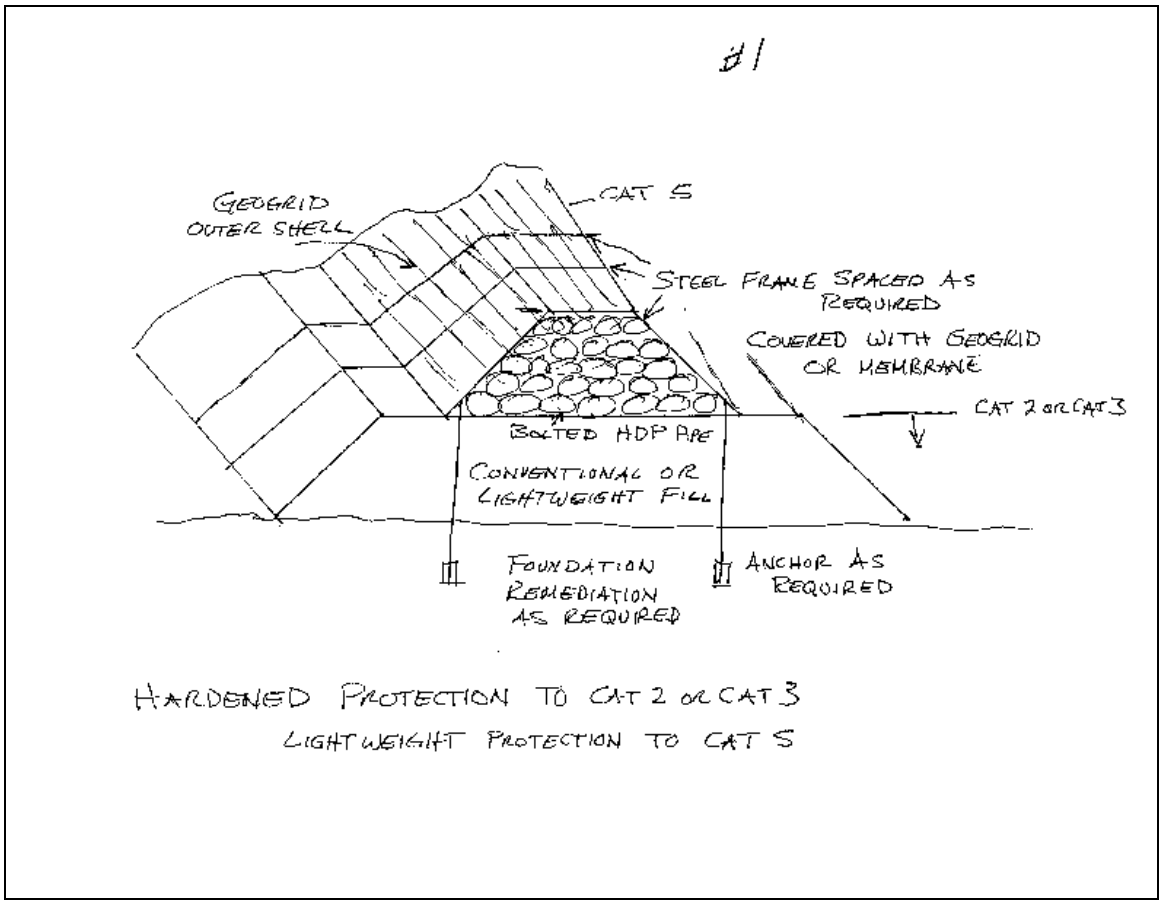

Figure 8: Lightweight HDP pipe on top of conventional earthen levee.

SELF-RAISING WALL

A sheet steel or concrete panel would be constructed with a hinge on the unprotected side. A self-raising mechanism would tilt the panel into position when a storm surge approaches. Tension cables tied to anchors on the unprotected side would be designed to resist still water and wave loads. This method is illustrated in Figure 9.

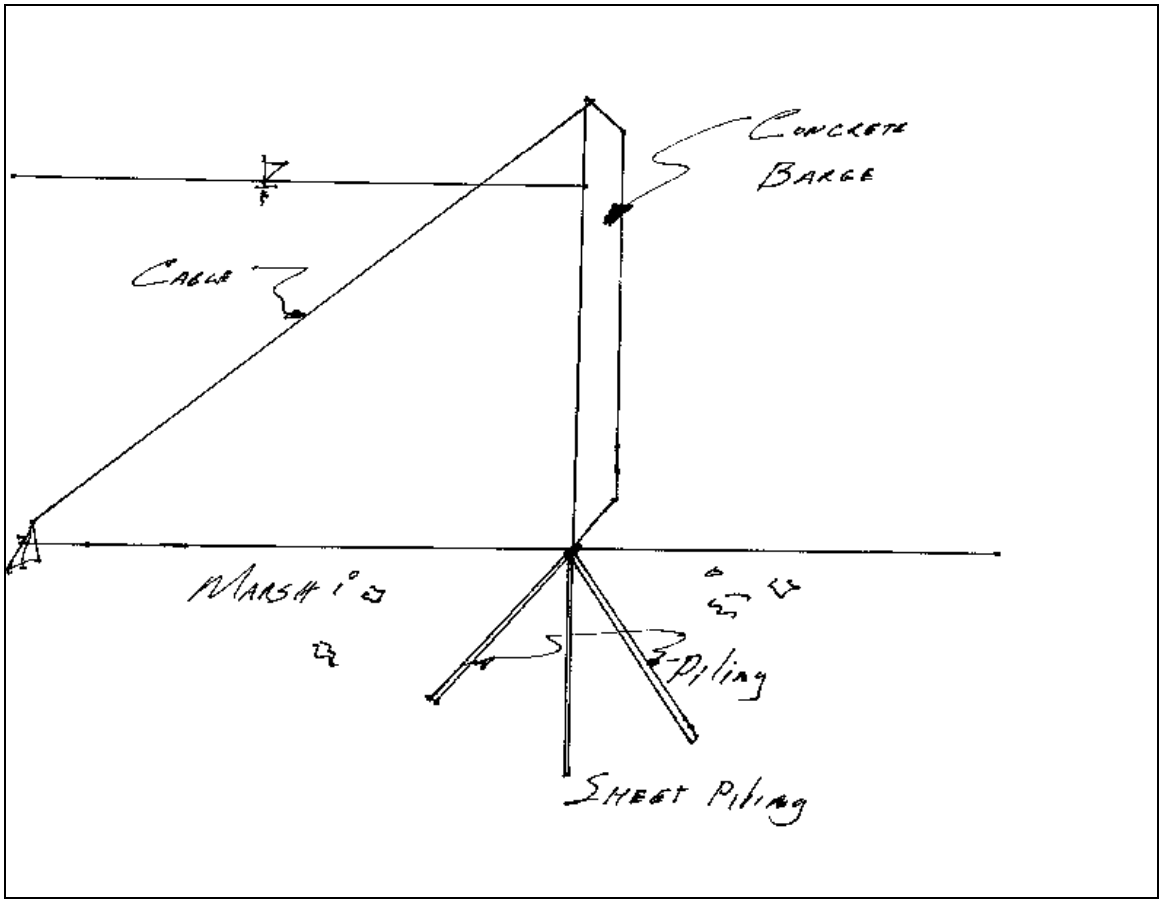

Figure 9: Self-raising wall section showing foundation piles and anchorage.

POP-UP CONCRETE WALL

This configuration features concrete panels that pivot into position with the rise of a storm surge. Once in position, the panels would rest in a seat at the base of the structure to lock them in position as illustrated in Figure 10. Support piles would be designed to support the walls at rest, as they pivot, and in the fully deployed position. These same piles would be required to resist the still water and wave loads from the storm.

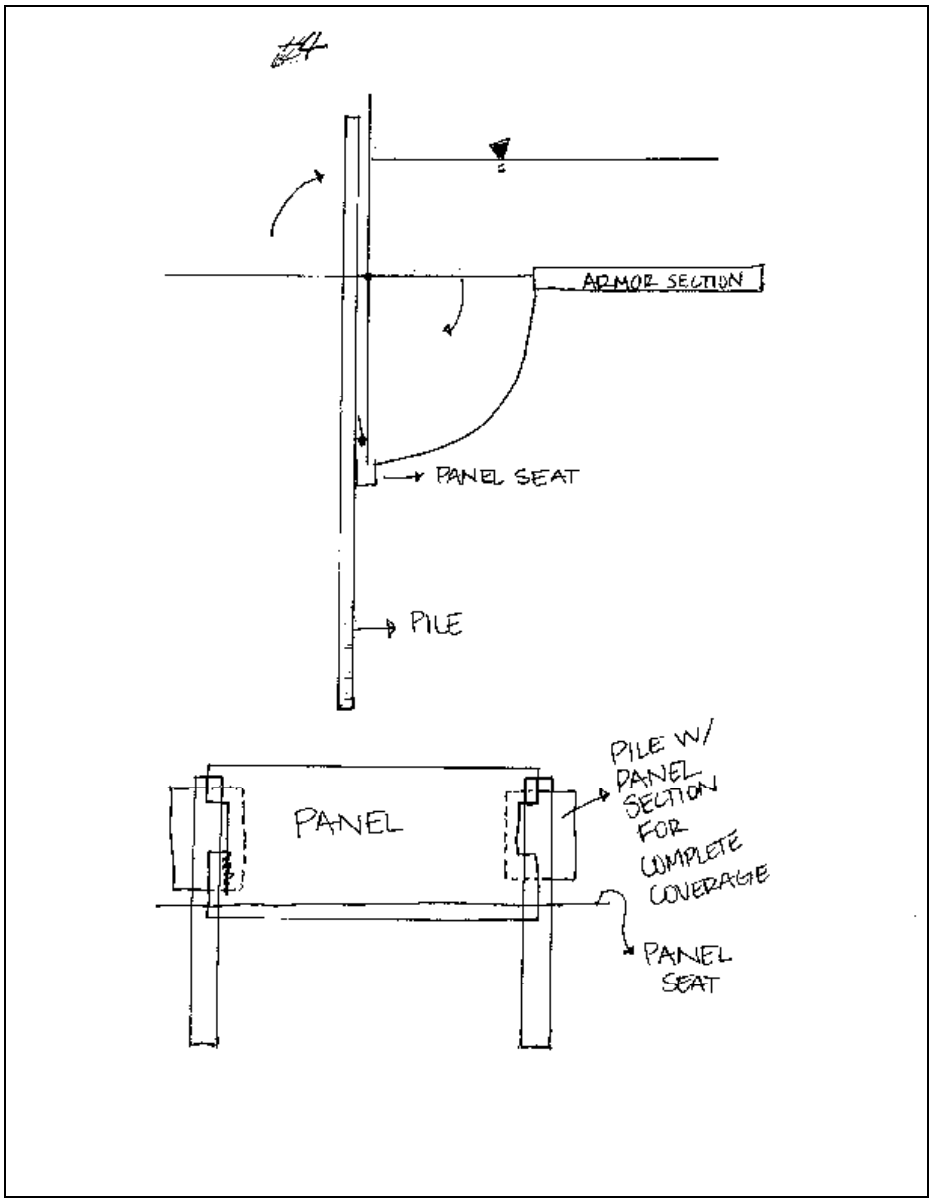

Figure 10:Pivoting pop-up wall section and elevation.

PARALLEL CONCRETE PANEL WALLS

This design recommendation features two vertical concrete panel walls with sand fill between. The panels would be braced with ties as shown in Figure 11. This scheme would minimize the barrier footprint and allow for future additions due to settlement.

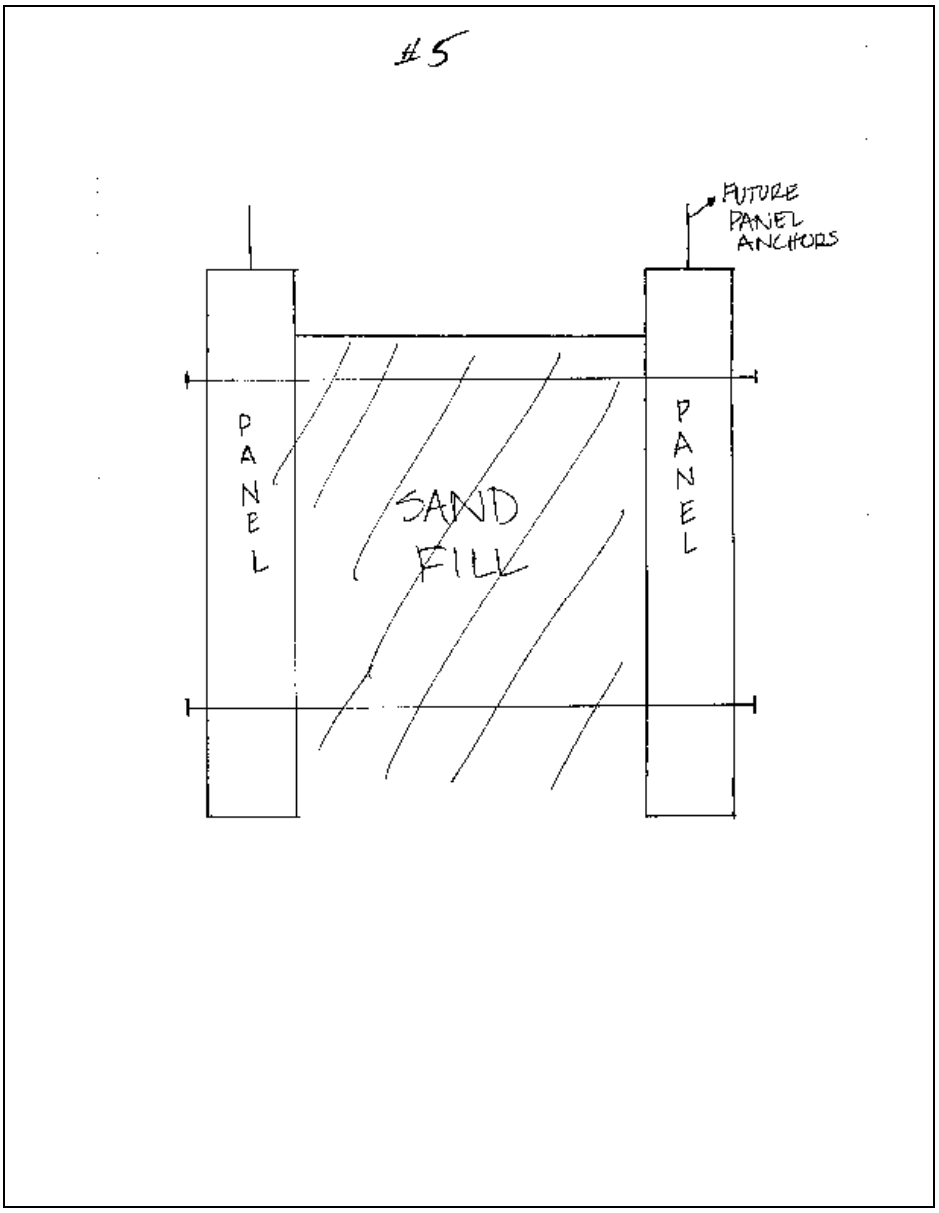

Figure 11: Sand-filled wall section.

HOLLOW CONCRETE BARRIER THAT FILLS AND DRAINS

Figure 12 provides a schematic typical section of a hollow concrete structure that would remain empty and relatively lightweight most of the time. With the rise of a storm surge, water would fill the interior to provide additional weight to the structure to resist horizontal forces and buoyancy. Flap gates oriented to empty toward the unprotected side would both drain the structure and adjacent flooding on the protected side.

The structure would be supported by a foundation built by soil mixing. An anchoring system and cutoff wall would provide additional strength against sliding and uplift.

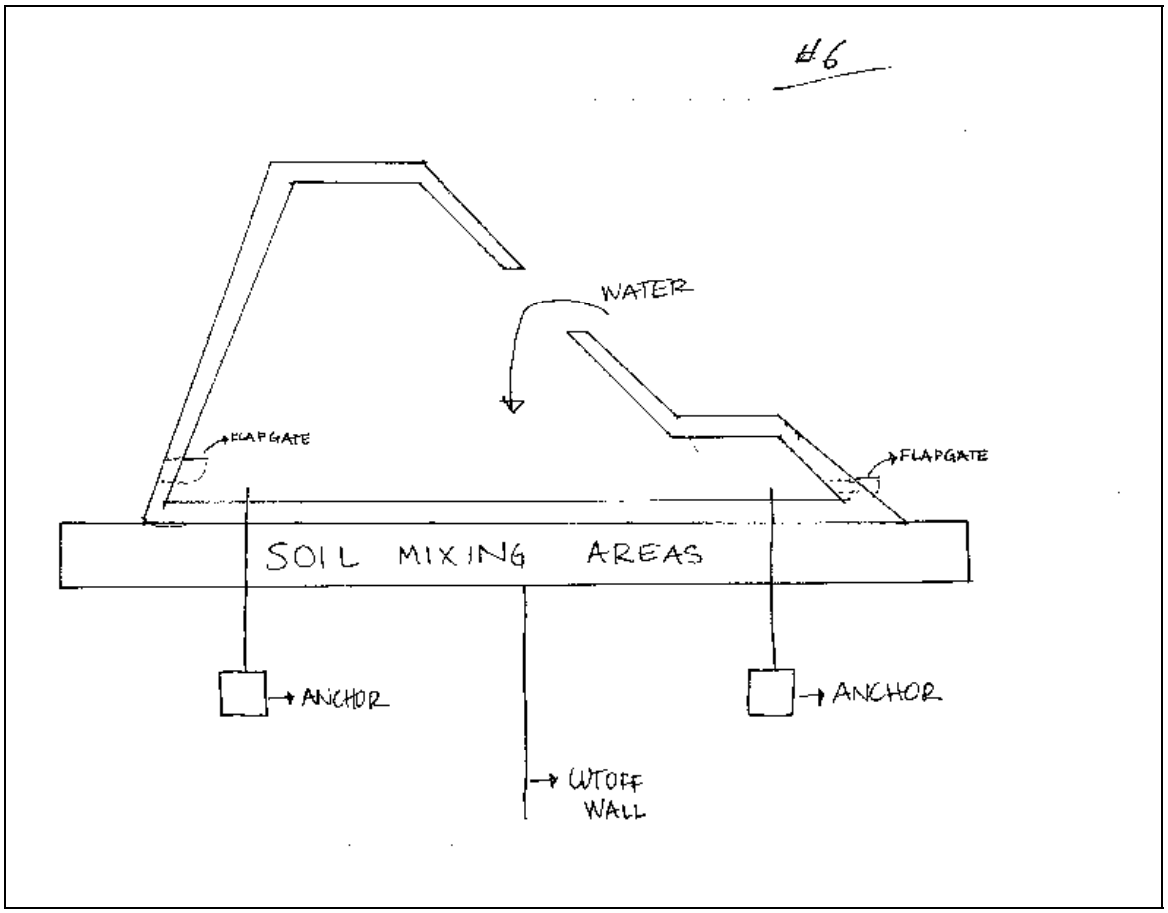

Figure 12: Hollow concrete barrier section.

GEOFOAM CORE LEVEE

Geofoam blocks could be used to build levees with a lightweight core. Material would be excavated at the site and suitable material would be stockpiled. Design would include anchors for the geofoam if required as shown in Figure 13.

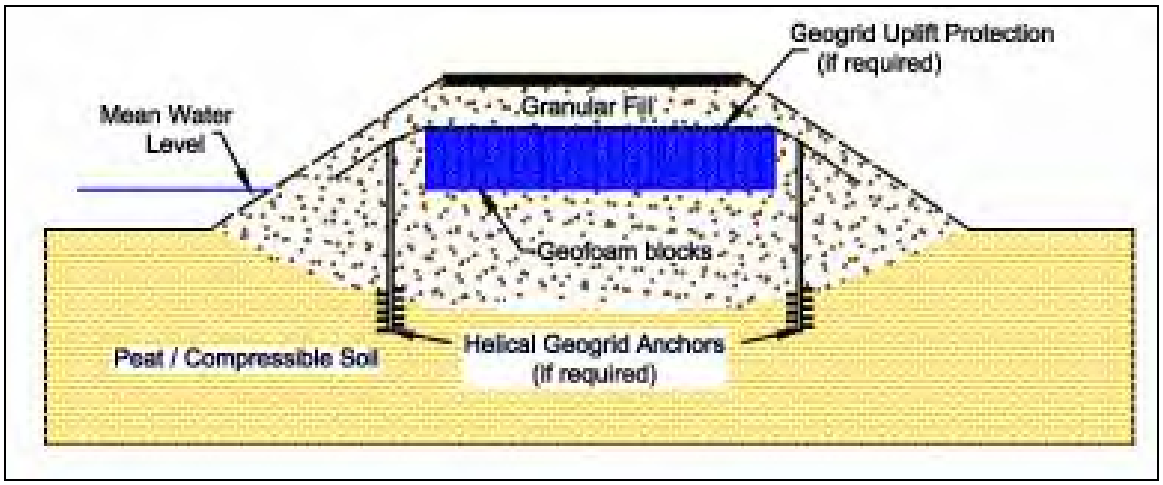

Figure 13: Detail of geofoam levee.

HYDRAULICALLY PUMPED LEVEE CONSTRUCTION

1.Build hydraulic fill containment dikes.

- El 8
- 600’ apart (levee footprint)
- Borrow from inside dikes

2. Pump hydraulic fill to about elevation 15 at centerline.

- 1v on 40h slopes

3.Install soil columns within levee footprint.

- 150’ wide rows
- Rows on 8 to 10’ spacings

4. Excavate between rows and replace with geofoam blocks to reduce base pressure.

- 5 to 8’ thick
- 100 ft wide

5. Build reinforced levee to elevation 40.

- Geotextile or geogrid to supplement soil columns

6. Pump additional hydraulic fill.

- Compensate for settlement
- Additional source of levee fill

7. Armor slopes for erosion.

US Army Corps
of Engineers®